REVISION HISTORY				
ZONE	REV	DESCRIPTION	DATE	APPROVED

895.20 TO TAGGER HARP
879.60 TO TAGGER RADIATOR
636.84 TO PRIMARY COLLIMATOR
609.15 TO TO CENTERLINE OF SWEEPER MAGNETS
576.90 TO PHOTON HARP
563.07 TO CENTER OF CLEAN-UP COLLIMATOR
510.15 TO CENTER OF PAIR SPECTROMETER DIPOLE

FOR CONTINUATION
SEE DRAWING NO.
28405-E-0034 REV N

WALL

PHOTON TAGGER MAGNET
DWG 66611-E-00620

VAT SERIES 01
VALVE #VBV2H00A

COLLIMATOR
DWG 66841-E-01967
AVAILABLE BARS:
2.0mm (out)
2.6mm (out)
4.8mm (out)
6.4mm (in)
8.6mm (out)
12.7mm (out)
ACTIVE (in)
(CHECK LOG
FOR CHANGES)

PERMANENT SWEEPER MAGNET
DWG 66840-E-03680

BEAM LINE PIPE
DWG 66810-C-03995
OAL = 24.81
4-1/2 CF FLG NR (US)
4-1/2 CF FLG R (DS)

14 mm CLEAN-UP COLLIMATOR
DWG 66840-C-03681-2 WITH
COLLIMATOR BAR CF FLANGE
DWG 66840-C-03150
(2) REQUIRED

HARP / RADIATOR
DWG 66840-E-03329
WITH PHOTON STICK
DWG 66840-D-03357

FLEXIBLE COUPLING
(4-1/2NR x 4-5/8R)
3.96 INSTALLED
LENGTH

PHOTON WINDOW PLATE
DWG 66810-E-03207

PH2H00

PAIR SPECTROMETER
MAGNET
MPS2H01

FLEXIBLE COUPLING
(4.50" FLANGES)
INSTALLED LGTH = 6.00

LEAD WALL
SUPPORT FRAME
DWG 66840-D-03381

REDUCING BEAM PIPE
OAL = 79.00
1.00 ODT x 1.50 OD
4-1/2 CF FLG NR DS
DWG 66810-D-04000

BEAM LINE PIPE
OAL = 34.56
4-1/2 CF FLG NR
4-1/2 CF FLG R

PMT BUNDLE
DWG 66840-D-03553

LEVEL 3

LEVEL 2

LEVEL 1

LEVEL 0

EXTENDABLE BEAM TUBE
DWG 66810-D-03951
INSTALLED LENGTH = 44.31
4-1/2 CF FLG NR
4-1/2 CF FLG R

REDUCING FLANGE
4-1/2 / 2-3/4
MDC NO. 150008

VAT SERIES 75
(FAST) VALVE
#VFV2H01

VAT SERIES 01
VALVE #VBV2H01A

BEAM PIPE
OAL = 115.25
DWG 66810-C-02871

VPG2H01A
VPG2H01B

FLEXIBLE COUPLING
WITH TIE RODS
DWG 66810-C-02875

36.49
18.38
5.56

TURBO
PUMP

TURBO
PUMP

85.375

TOP OF INSERT
CART TRACKS
TO CL BEAM
(SURVEY DIM)

16.00 HIGH DENSITY
CONCRETE BLOCKS

TAGGER VACUUM BOX
DWG 66610-E-00667

STEEL SUPPORT PLATE
1.00 THICK

2X
BEAM PIPE
A-FRAME SUPPORT
DWG 66840-E-02453

INSERTION CART
DWG 66890-E-01566

OUTER LEAD COLLIMATOR
DWG 66850-E-02663

INNER COLLIMATOR
DWG 66850-E-02661

HY80 STEEL SUPPORT PLATES
.75 x 80.00 x 72.00
& .75 x 80.00 x 60.00

Ø7.64 HELIUM BAG

2.00 THK KIRKSITE

HELIUM BAG WINDOW
ALUMINUM 25 MICRON

ORIGINAL BEAM CL

ALCOVE FLOOR

VACUUM BOX
DWG 66810-E-03209
w/ UPSTREAM END PLATE
DWG 66810-D-03811

TAGGER HODOSCOPE
ENCLOSURE

.005 THK ALUMINUM
BEAM WINDOW IN FRAMES
DWG 66850-E-04511

SHIELDING SUPPORT FRAME
DWG. 66840-E-04590

BEAM DUMP CAMERA
DWG 66820-E-03052

TAGGER BEAM DUMP
DWG 66820-E-01928

SPACE FRAME
DWG 66880-E-01159
(PLANT ENGRG DWG
93-C-8-1801-001)

CL CLAS

REGION 3
DRIFT CHAMBER

TOROIDAL MAGNET

REGION 2
DRIFT CHAMBER

157.87
117.95
39.92
32.18

LEAD SHIELDING
& DOCKING RING
DWG 66870-E-02063

REGION 1
DRIFT CHAMBER

FWD CARRIAGE HALO COUNTERS
DWG 66840-E-03687

LEAD SHIELDING
DWG 66870-E-03083

12.75

DN MAGNET
DWG 21112-E-0201

FWD CARRIAGE APEX
DWG 66580-C-02091

BEAM PIPE SHIELDING
66840-E-02620

HELIUM GAS BAG
3.82 DIA PLASTIC

VIII. SEE SHEET 2

FOR ENLARGED VIEW OF TARGET
SEE 66840-E-04073 SHT 2

FOR CONTINUATION
SEE DRAWING NO.
28405-E-0037 Rev. K

BEAM DIRECTION

FORWARD CARRIAGE
DWG 66580-E-01095
(PLANT ENGRG DWG
94-C-8-1808-001)

FLOOR
HALL B
LEVEL 0

DOCUMENT CONTROL STAMP	DIM & TOL PER ASME Y14.5 UNLESS OTHERWISE SPECIFIED DIMENSIONS ARE IN INCHES TOLERANCES ARE: FRACTIONS ± N/A DECIMAL .X ± N/A .XX ± N/A .XXX ± N/A ANGLES ± N/A	TRACKING NO. /wbs/6/zarecky/66000 /4700/66840e04707_01	Thomas Jefferson National Accelerator Facility NEWPORT NEWS, VIRGINIA UNITED STATES DEPARTMENT OF ENERGY
MATERIAL N/A	THIRD ANGLE PROJECTION	APPROVALS / DRAWN M. ZARECKY 2/20/07 / CHECKED 3/1/07 / APPROVED 3/1/07 / APPROVED 3/1/07	HALL B CLAS BEAM LINE ASSEMBLY FROM TAGGER MAGNET THRU FWD CARRIAGE FOR g13b RUN (SPRING 2007)
FINISH MACHINED SURFACES N/A UNLESS OTHERWISE NOTED DEBURR & BREAK ALL SHARP EDGES			SIZE E / DWG. NO. 66840-E-04707 / REV. -
DO NOT SCALE DRAWING			SCALE 1/24 / USED ON ASSY NO. - / SHEET 1 OF 3

REVISION HISTORY				
ZONE	REV	DESCRIPTION	DATE	APPROVED

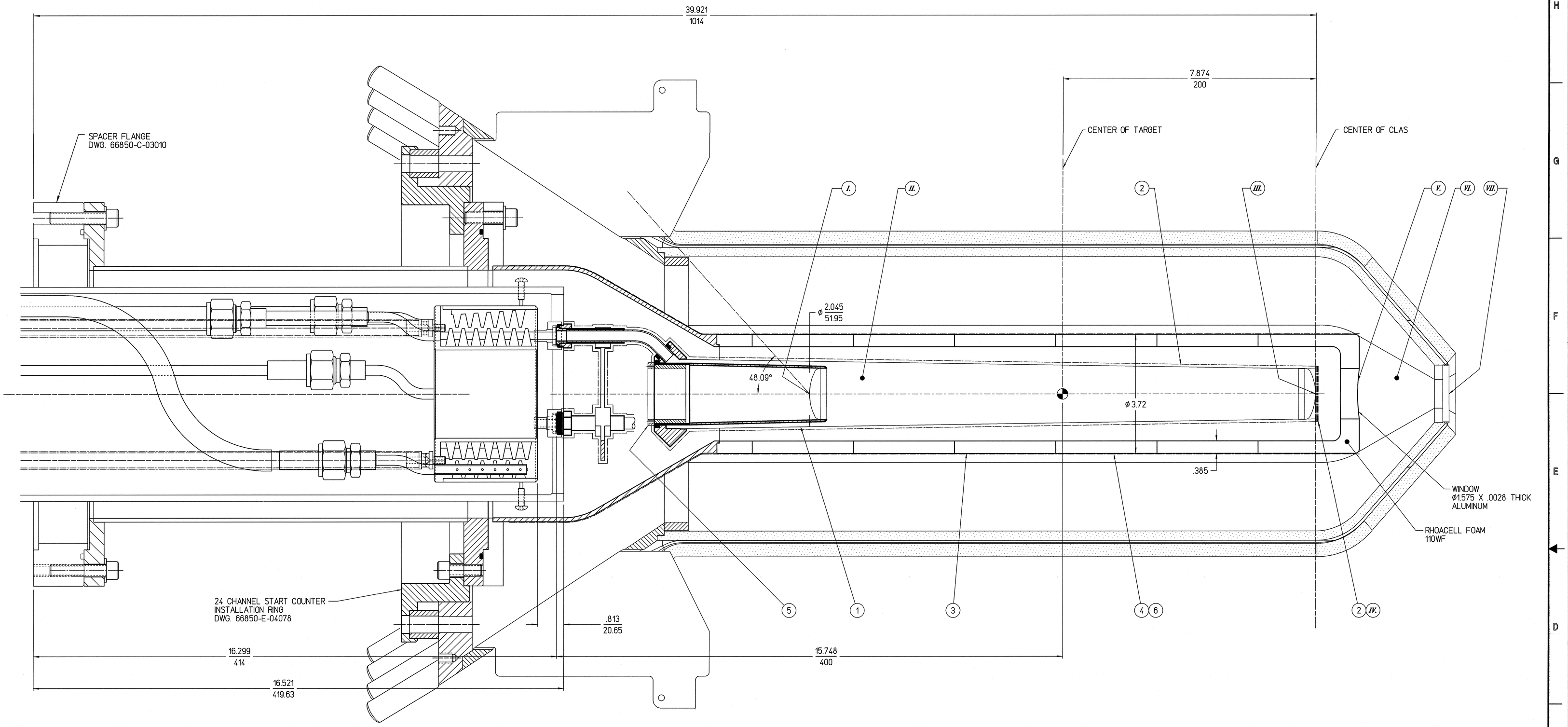

TABLE –A–
MISCELLANEOUS CELL MATERIALS & THERMAL INSULATION

ITEM	MATERIAL
1	CELL DWG 66850-C-04070
2	5 LAYERS OF SUPERINSULATION EACH w/ 1 PLY CEREX
3	SCATTERING CHAMBER - JLAB DWG 66850-E-04074
4	SAFETY SOCK (LEGGS J504X ~ SIZE 1X)
5	BEAM OFFSET MONITOR (IOH2H01) ID = 40.9 mm DWG 66850-C-03988 Z = -42.8 cm TO -39.8 cm
6	TEDLAR .001" THICK

TABLE –B–
MATERIALS IN THE BEAM LINE

ITEM	DESCRIPTION	"Z" LOCATION (cm)	MATERIAL	THICKNESS (cm)	INSIDE DIA (cm)
I.	TARGET CELL INLET WINDOW	-40.00	KAPTON ALUM.	127 microns 15 microns	4.0 IR HEMI. 5mm ø
II.	TARGET LIQUID	N/A	D_2	40.00	4.00 CONICAL
III.	TARGET CELL EXIT WINDOW	0.0	KAPTON ALUM.	127 microns 15 microns	4.0 IR HEMI. 5mm ø
IV.	TARGET CELL SUPER-INSULATION	0.2	5 LAYERS SI 1 PLY CEREX	2.5 mm	4.00 IR HEMISPHERICAL
V.	SCATTERING CHAMBER EXIT WINDOW	3.3	ALUM.	71 microns	4.00
VI.	AIR GAP	N/A	AIR	68.2	VARIOUS
VII.	START COUNTER DS OPENING	10.6	N/A	N/A	4.00
VIII.	HELIUM BAG ENTRANCE WINDOW SEE SHEET 1	80.8	KAPTON	51 microns	8.93
IX.	HELIUM BAG EXIT WINDOW	N/A	KAPTON	51 microns	8.93

TABLE –C–

MATERIAL	DENSITY
SUPER-INSULATION (ALUMINIZED MYLAR)	0.88 mg/cm^2 /Layer
SUPER-INSULATION (CEREX)	1.0 mg/cm^2 /Layer/Ply
SCATTERING CHAMBER FOAM WALLS	107 mg/cm^2
SCATTERING CHAMBER SAFETY SOCK	NYLON 4.0 mg/cm^2
CELL WALL	KAPTON 18 mg/cm^2
TEDLAR FILM	1.4 - 1.7 g/cc

EACH SHEET OF A MULTI-SHEET DRAWING SHALL ALWAYS CARRY THE SAME REVISION LEVEL

DOCUMENT CONTROL STAMP

MATERIAL: N/A

FINISH MACHINED SURFACES N/A UNLESS OTHERWISE NOTED
DEBURR & BREAK ALL SHARP EDGES

DO NOT SCALE DRAWING

DIM & TOL PER ASME Y14.5
UNLESS OTHERWISE SPECIFIED
DIMENSIONS ARE IN INCHES
TOLERANCES ARE:
FRACTIONS ± N/A DECIMAL X ± N/A XX ± N/A XXX ± N/A ANGLES ± N/A

THIRD ANGLE PROJECTION

TRACKING NO. /wbs/6/zarecky/66000/4700/66840e04707_02

Thomas Jefferson National Accelerator Facility
Operated by JSA for the UNITED STATES DEPARTMENT OF ENERGY

APPROVALS	DATE
DRAWN M. ZARECKY	2/20/07
CHECKED	7/6/07
APPROVED	7/6/07
APPROVED	7/11/07

HALL B
CLAS BEAM LINE ASSEMBLY
FROM TAGGER MAGNET THRU FWD CARRIAGE
FOR g13b RUN (SPRING 2007)

SIZE E | DWG. NO. 66840-E-04707 | REV. –
SCALE 7/8 | USED ON ASSY NO. – | SHEET 2 OF 3

Me10

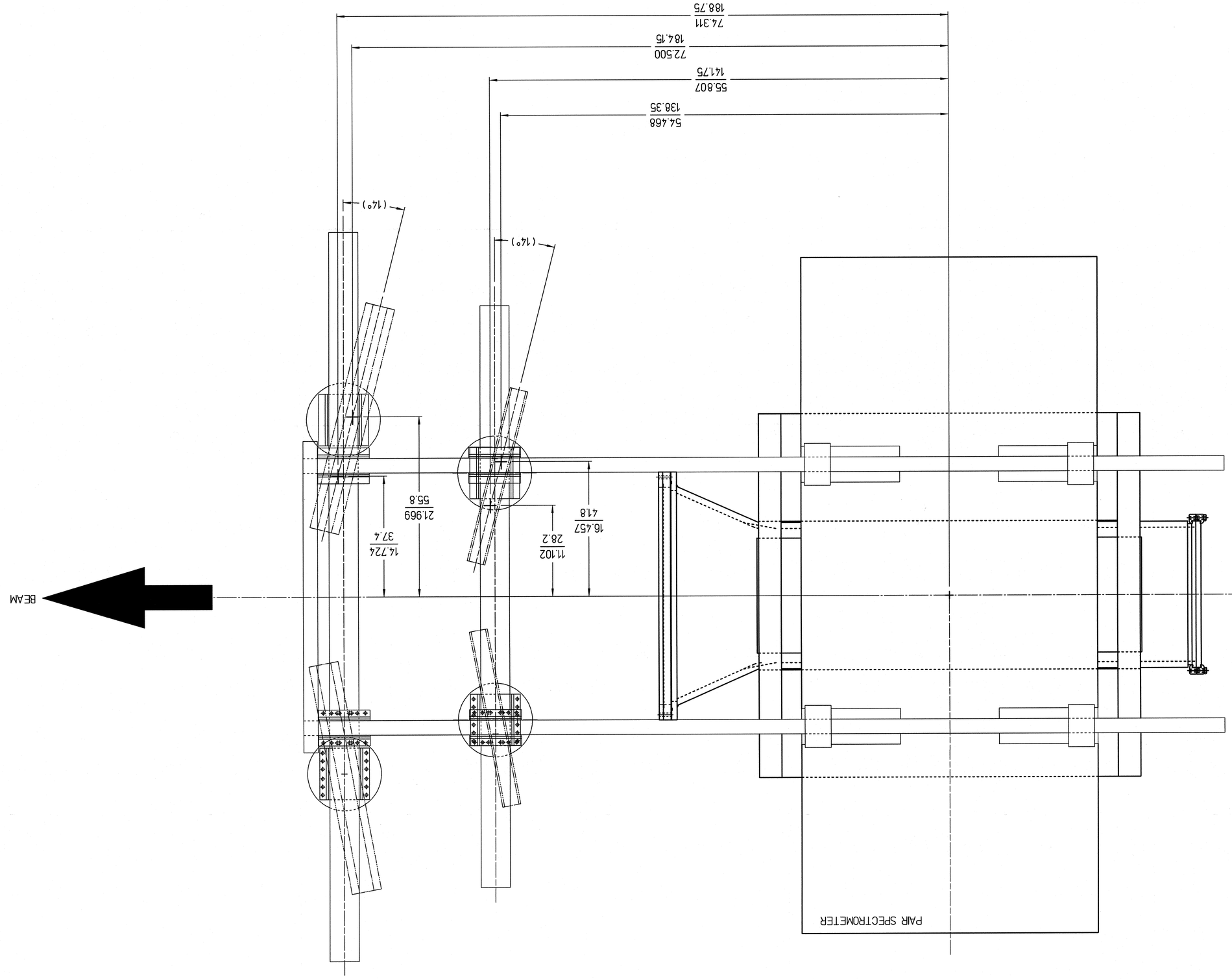

ZONE	REV	DESCRIPTION	DATE	APPROVED

REVISION HISTORY

DOCUMENT CONTROL STAMP			
NATERAL	N/A		
FINISH MACHINED SURFACES	N/A	UNLESS OTHERWISE NOTED	
DEBURR & BREAK ALL SHARP EDGES			
DO NOT SCALE DRAWING			

TRACKING NO. /wbs/6/zcrecky/66000 /4700/66840e04707_03

DRAWN	M. ZARECKY	2/20/07
CHECKED		3/6/07
APPROVED		3/6/07
APPROVED		3/6/07

DIM & TOL PER ASME Y14.5
UNLESS OTHERWISE SPECIFIED
DIMENSIONS ARE IN INCHES
TOLERANCES ARE:
FRACTIONS ± N/A
DECIMAL ANGLES ± .50°
X ± N/A
XX ± .02
XXX ± .005

THIRD ANGLE PROJECTION

Thomas Jefferson National Accelerator Facility
UNITED STATES DEPARTMENT OF ENERGY

HALL B
CLAS BEAM LINE ASSEMBLY
FROM TAGGER MAGNET THRU FWD CARRIAGE
FOR g13b RUN (SPRING 2007)

SIZE	DWG. NO.	REV.
E	66840-E-04707	-

SCALE	USED ON ASSY NO.	SHEET 3 OF 3
1/6		

M610