REVISION HISTORY				
ZONE	REV	DESCRIPTION	DATE	APPROVED
ALL	A	REVISED AS INSTALLED MRZ 10/31/06	11/7/06	

895.20 TO TAGGER HARP
879.60 TO TAGGER RADIATOR
636.84 TO PRIMARY COLLIMATOR
609.15 TO TO CENTERLINE OF SWEEPER MAGNETS
576.90 TO PHOTON HARP
563.07 TO CENTER OF CLEAN-UP COLLIMATOR
510.15 TO CENTER OF PAIR SPECTROMETER DIPOLE

FOR CONTINUATION SEE DRAWING NO. 28405-E-0034 REV N

WALL

PHOTON TAGGER MAGNET DWG 66611-E-00620

VAT SERIES 01 VALVE #VBV2H00A

COLLIMATOR DWG 66841-E-01967 AVAILABLE BARS:
2.0mm (out)
2.6mm (out)
4.8mm (in)
6.4mm (in)
8.6mm (in)
12.7mm (out)

PERMANENT SWEEPER MAGNET DWG 66840-E-03680

BEAM LINE PIPE DWG 66810-C-03995 OAL = 24.81 4-1/2 CF FLG NR (US) 4-1/2 CF FLG R (DS)

14 mm CLEAN-UP COLLIMATOR DWG 66840-C-03681-2 WITH COLLIMATOR BAR CF FLANGE DWG 66840-C-03150 (2) REQUIRED

HARP / RADIATOR DWG 66840-E-03329 WITH PHOTON STICK DWG 66840-D-03357

FLEXIBLE COUPLING (4.50" FLANGES) INSTALLED LGTH = 6.00

LEAD WALL SUPPORT FRAME DWG 66840-D-03381

BEAM LINE PIPE OAL = 34.56 4-1/2 CF FLG NR 4-1/2 CF FLG R

EXTENDABLE BEAM TUBE DWG 66810-D-03951 INSTALLED LENGTH = 44.31 4-1/2 CF FLG NR 4-1/2 CF FLG R

REDUCING FLANGE 4-1/2 / 2-3/4 MDC NO. 150008

VAT SERIES 75 (FAST) VALVE #VFV2H01

VAT SERIES 01 VALVE #VBV2H01A

PMT BUNDLE DWG 66840-D-03553

FLEXIBLE COUPLING (4-1/2NR x 4-5/8R) 3.96 INSTALLED LENGTH

REDUCING BEAM PIPE OAL = 79.00 1.00 ODT x 1.50 OD 4-1/2 CF FLG NR DS DWG 66810-D-04000

PHOTON WINDOW PLATE DWG 66810-E-03207

PAR SPECTROMETER MAGNET MPS2H01

PH2H00

BEAM PIPE OAL = 115.25 DWG 66810-C-02871

VPG2H01A VPG2H01B

FLEXIBLE COUPLING WITH TIE RODS DWG 66810-C-02875

36.49

18.38

5.56

TURBO PUMP

TURBO PUMP

85.375

TOP OF INSERT CART TRACKS TO CL BEAM (SURVEY DIM)

LEVEL 3

LEVEL 2

LEVEL 1

LEVEL 0

16.00 HIGH DENSITY CONCRETE BLOCKS

TAGGER VACUUM BOX DWG 66610-E-00667

STEEL SUPPORT PLATE 1.00 THICK

2X BEAM PIPE A-FRAME SUPPORT DWG 66840-E-02453

INSERTION CART DWG 66890-E-01566

OUTER LEAD COLLIMATOR DWG 66850-E-02663

INNER COLLIMATOR DWG 66850-E-02661

HY80 STEEL SUPPORT PLATES .75 x 80.00 x 72.00 & .75 x 80.00 x 60.00

ø7.64 HELIUM BAG

2.00 THK KIRKSITE

HELIUM BAG WINDOW ALUMINUM 25 MICRON

ORIGINAL BEAM CL

13.00

ALCOVE FLOOR

VACUUM BOX DWG 66810-E-03209 w/ UPSTREAM END PLATE DWG 66810-D-03811

TAGGER HODOSCOPE ENCLOSURE

.005 THK ALUMINUM BEAM WINDOW IN FRAMES DWG 66850-E-04511

SHIELDING SUPPORT FRAME DWG. 66840-E-04590

HIGH DENSITY CONCRETE BLOCKS 7.63 x 7.63 x 15.63

DISTANCE BETWEEN INSIDE OF WALLS IS 50.00 THROUGHOUT

BEAM DUMP CAMERA DWG 66820-E-03052

TAGGER BEAM DUMP DWG 66820-E-01928

FOR CONTINUATION SEE DRAWING NO. 28405-E-0037 Rev. K

SPACE FRAME DWG 66880-E-01159 (PLANT ENGRG DWG 93-C-8-1801-001)

CL CLAS

REGION 3 DRIFT CHAMBER

TOROIDAL MAGNET

REGION 2 DRIFT CHAMBER

157.87

117.95

39.92

32.18

LEAD SHIELDING & DOCKING RING DWG 66870-E-02063

REGION 1 DRIFT CHAMBER

FWD CARRIAGE HALO COUNTERS DWG 66840-E-03687

LEAD SHIELDING DWG 66870-E-03083

DN MAGNET DWG 21112-E-0201

12.75

FWD CARRIAGE APEX DWG 66580-C-02091

BEAM PIPE SHIELDING 66840-E-02620

HELIUM GAS BAG 3.82 DIA PLASTIC

VIII. SEE SHEET 2

FOR ENLARGED VIEW OF TARGET SEE 66840-E-04073 SHT 2

BEAM DIRECTION

FORWARD CARRIAGE DWG 66580-E-01095 (PLANT ENGRG DWG 94-C-8-1808-001)

FLOOR HALL B LEVEL 0

DOCUMENT CONTROL STAMP: JLAB	DIM & TOL PER ASME Y14.5 UNLESS OTHERWISE SPECIFIED DIMENSIONS ARE IN INCHES TOLERANCES ARE: FRACTIONS ± N/A DECIMAL X ± N/A XX ± N/A XXX ± N/A ANGLES ± N/A	TRACKING NO. /wbs/E/zarecky/66000 /4600/66840e04661_01revA	Thomas Jefferson National Accelerator Facility, Operated by Jefferson Science Associates, LLC, UNITED STATES DEPARTMENT OF ENERGY
MATERIAL: N/A	THIRD ANGLE PROJECTION	APPROVALS / DATE	HALL B CLAS BEAM LINE ASSEMBLY FROM TAGGER MAGNET THRU FWD CARRIAGE FOR g13a RUN (FALL 2006)
FINISH: MACHINED SURFACES N/A; UNLESS OTHERWISE NOTED DEBURR & BREAK ALL SHARP EDGES		DRAWN M. ZARECKY 9/6/06 CHECKED D. KASHY 10/18/06 APPROVED D. KASHY 10/18/06 APPROVED D. KASHY 10/18/06	SIZE E; DWG. NO. 66840-E-04661; REV. A SCALE 1/24; USED ON ASSY NO. -; SHEET 1 OF 3
DO NOT SCALE DRAWING			

REVISION HISTORY				
ZONE	REV	DESCRIPTION	DATE	APPROVED
ALL	A	REVISED AS INSTALLED (SEE SHT 1) MRZ 10/31/06	11/3/06	

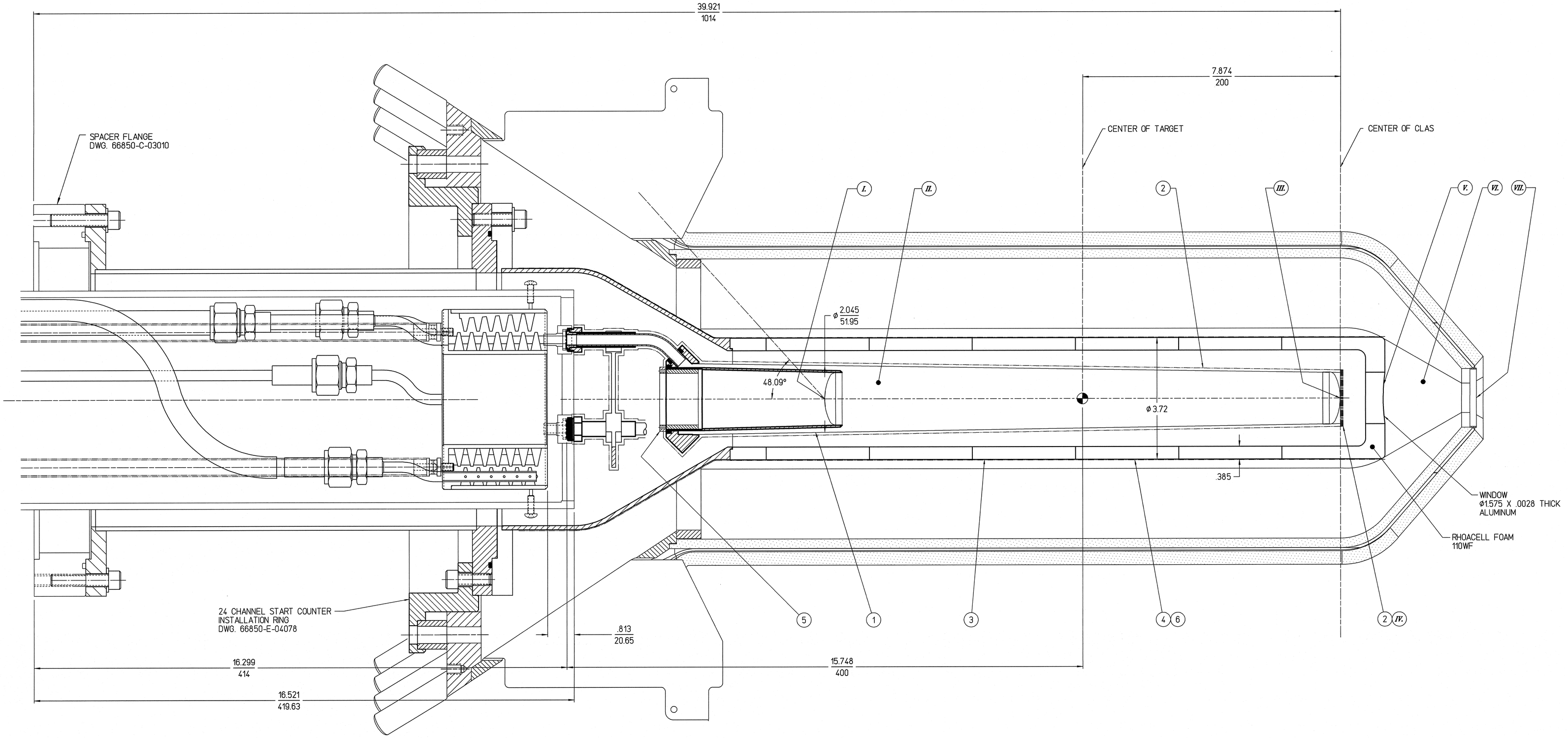

TABLE –A–
MISCELLANEOUS CELL MATERIALS & THERMAL INSULATION

ITEM	MATERIAL
1	CELL DWG 66850-C-04070
2	5 LAYERS OF SUPERINSULATION EACH w/ 1 PLY CEREX
3	SCATTERING CHAMBER - JLAB DWG 66850-E-04074
4	SAFETY SOCK (LEGGS J504X ~ SIZE 1X)
5	BEAM OFFSET MONITOR (IOH2H01) ID = 40.9 mm DWG 66850-C-03988 Z = -42.8 cm TO -39.8 cm
6	TEDLAR .001" THICK

TABLE –B–
MATERIALS IN THE BEAM LINE

ITEM	*DESCRIPTION*	*"Z" LOCATION (cm)*	*MATERIAL*	*THICKNESS (cm)*	*INSIDE DIA (cm)*
I.	*TARGET CELL INLET WINDOW*	*-40.00*	*KAPTON ALUM.*	*127 microns 15 microns*	*4.0 IR HEMI. 5mm ø*
II.	*TARGET LIQUID*	*N/A*	*D_2*	*40.00*	*4.00 CONICAL*
III.	*TARGET CELL EXIT WINDOW*	*0.0*	*KAPTON ALUM.*	*127 microns 15 microns*	*4.0 IR HEMI. 5mm ø*
IV.	*TARGET CELL SUPER-INSULATION*	*0.2*	*5 LAYERS SI. 1 PLY CEREX*	*2.5 mm*	*4.00 IR. HEMISPHERICAL*
V.	*SCATTERING CHAMBER EXIT WINDOW*	*3.3*	*ALUM.*	*71 microns*	*4.00*
VI.	*AIR GAP*	*N/A*	*AIR*	*68.2*	*VARIOUS*
VII.	*START COUNTER DS OPENING*	*10.6*	*N/A*	*N/A*	*4.00*
VIII.	*HELIUM BAG ENTRANCE WINDOW SEE SHEET 1*	*80.8*	*KAPTON*	*51 microns*	*8.93*
IX.	*HELIUM BAG EXIT WINDOW*	*N/A*	*KAPTON*	*51 microns*	*8.93*

TABLE –C–

MATERIAL	DENSITY
SUPER-INSULATION (ALUMINIZED MYLAR)	*0.88 mg/cm^2 /Layer*
SUPER-INSULATION (CEREX)	*1.0 mg/cm^2 /Layer/Ply*
SCATTERING CHAMBER FOAM WALLS	*107 mg/cm^2*
SCATTERING CHAMBER SAFETY SOCK	*NYLON 4.0 mg/cm^2*
CELL WALL	*KAPTON 18 mg/cm^2*
TEDLAR FILM	*1.4 - 1.7 g/cc*

EACH SHEET OF A MULTI-SHEET DRAWING SHALL ALWAYS CARRY THE SAME REVISION LEVEL

DOCUMENT CONTROL STAMP

MATERIAL: N/A

FINISH MACHINED SURFACES: N/A UNLESS OTHERWISE NOTED
DEBURR & BREAK ALL SHARP EDGES

DO NOT SCALE DRAWING

DIM & TOL PER ASME Y14.5
UNLESS OTHERWISE SPECIFIED
DIMENSIONS ARE IN INCHES
TOLERANCES ARE:
FRACTIONS ± N/A DECIMAL X. ± N/A XX. ± N/A XXX ± N/A ANGLES ± N/A

THIRD ANGLE PROJECTION

TRACKING NO.
wbs/6/zarecky/66000
4600/66840e04661_02.revA

APPROVALS	DATE
DRAWN M. ZARECKY	9/6/06
CHECKED D. KASHY	10/18/06
APPROVED D. KASHY	10/18/06
APPROVED D. KASHY	10/18/06

Thomas Jefferson National Accelerator Facility
NEWPORT NEWS, VIRGINIA
UNITED STATES DEPARTMENT OF ENERGY

HALL B
CLAS BEAM LINE ASSEMBLY
FROM TAGGER MAGNET THRU FWD CARRIAGE
FOR g13a RUN (FALL 2006)

SIZE E | DWG. NO. 66840-E-04661 | REV. A
SCALE 7/8 | USED ON ASSY NO. – | SHEET 2 OF 3

Me10

REVISION HISTORY				
ZONE	REV	DESCRIPTION	DATE	APPROVED
ALL	A	REVISED AS INSTALLED (SEE SHEET 1) MRZ 10/31/06	11/3/06	DAK

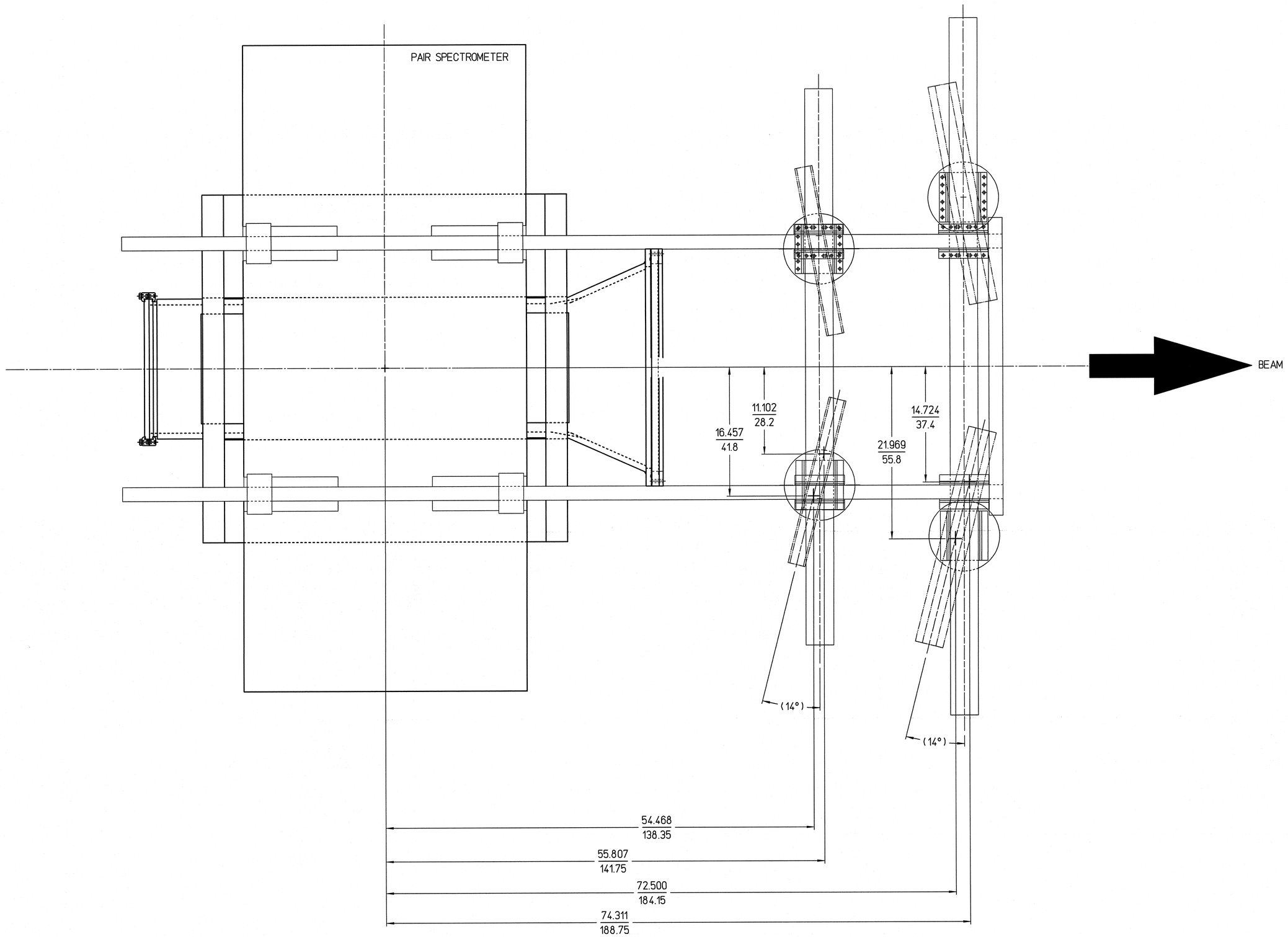

DOCUMENT CONTROL STAMP: DCG	DIM & TOL PER ASME Y14.5 UNLESS OTHERWISE SPECIFIED DIMENSIONS ARE IN INCHES TOLERANCES ARE: FRACTIONS ± N/A; DECIMAL .X ± N/A, .XX ± .02, .XXX ± .005; ANGLES ± .50°	TRACKING NO. /wbs/6/zarecky/66000/4600/66840e04661_03.revA	Thomas Jefferson National Accelerator Facility, NEWPORT NEWS, VIRGINIA, UNITED STATES DEPARTMENT OF ENERGY
MATERIAL: N/A	THIRD ANGLE PROJECTION	APPROVALS / DATE	HALL B CLAS BEAM LINE ASSEMBLY FROM TAGGER MAGNET THRU FWD CARRIAGE FOR g13a RUN (FALL 2006)
FINISH MACHINED SURFACES N/A UNLESS OTHERWISE NOTED; DEBURR & BREAK ALL SHARP EDGES		DRAWN: M. ZARECKY 10/13/06	SIZE: E; DWG. NO.: 66840-E-04661; REV.: A
DO NOT SCALE DRAWING		CHECKED: D. KASHY 10/18/06	SCALE: 1/6; USED ON ASSY NO.: -; SHEET 3 OF 3
		APPROVED: D. KASHY 10/18/06	
		APPROVED: D. KASHY 10/18/06	

Me10